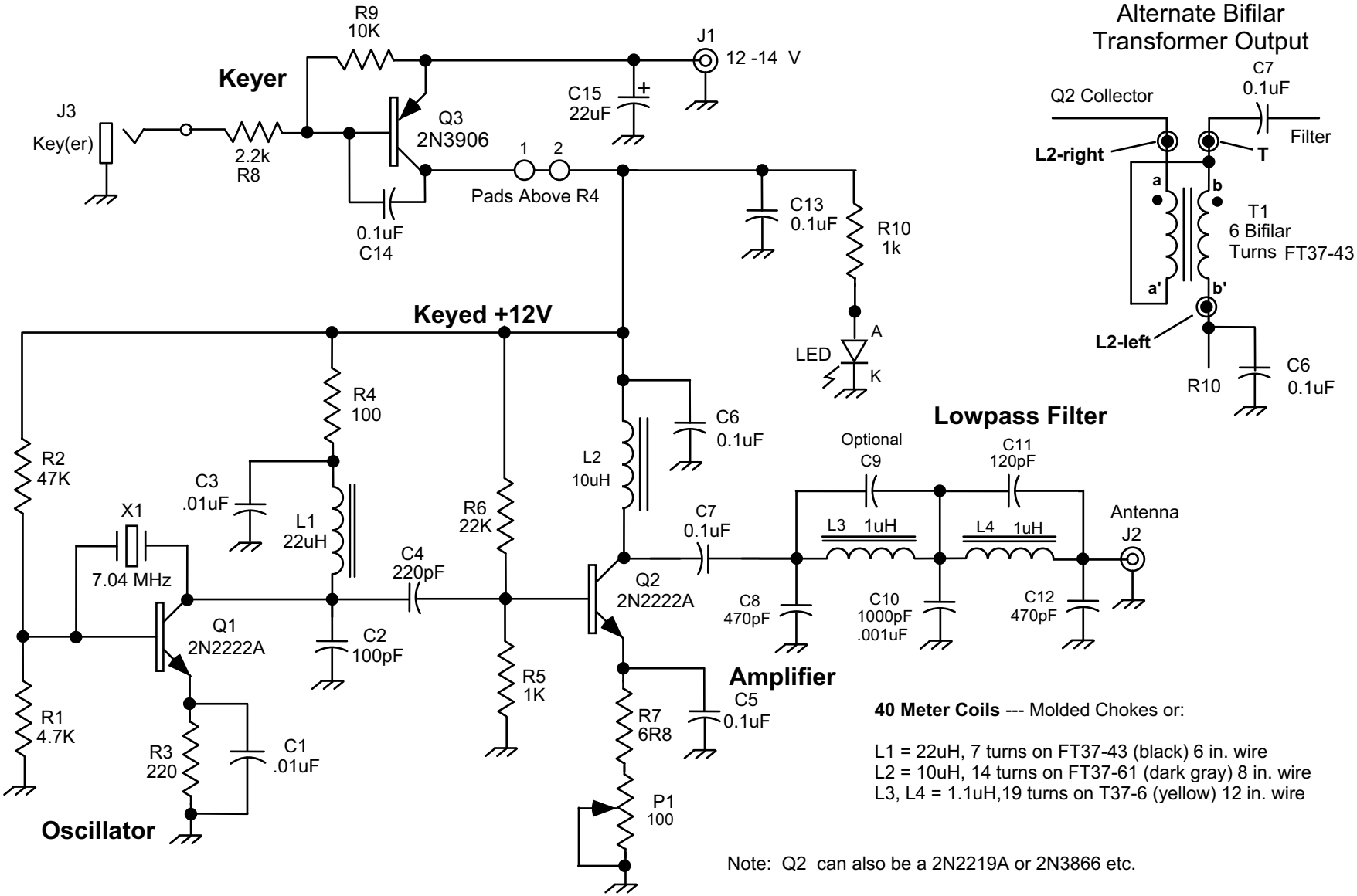

Two Tinned Tuna][EZ Build

W5USJ Drawing 20 Jan 2011